# Sports Lighting Bracket
## Wood Pole Bracket

## PROJECT INFORMATION

| | |
|---|---|
| JOB NAME | |
| FIXTURE TYPE | Sports Light Wood Pole Bracket |
| CATALOG NUMBER | 500-005G |
| APPROVED BY | |

## SPECIFICATIONS

**Construction:**
- Steel

**Overall Width:**
- 156″ (396.24 cm)

**Weight:**
- 239 lbs (108.41 kg)

**EPA:** 8.9

**Warranty:**
- Five-year limited warranty

## DIMENSIONS

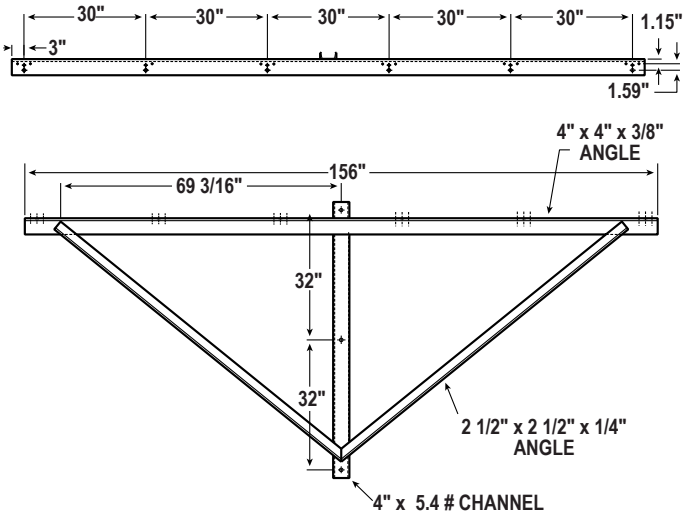


## ORDERING INFORMATION

| CATALOG # | DESCRIPTION | FINISH |
|---|---|---|
| 500-005G | 6 Light Bracket | Galvanized |


**Atlas Lighting Products, Inc.**
PO Box 2348 | Burlington, NC 27216
800-849-8485 | fax: 1-855-847-2794 | www.atlasled.com


*The majority of Atlas Lighting Products are assembled in USA facilities by an American Workforce utilizing both Domestic and Foreign components. Meets Buy American requirements within the ARRA.