Heavy Duty Wireguard

MANUFACTURED* & TESTED IN USA

BUY AMERICAN COMPLIANT*

PROJECT INFORMATION

JOB NAME	
FIXTURE TYPE	Heavy Duty Wireguard
CATALOG NUMBER	
APPROVED BY	

SPECIFICATIONS

Features:

- Combination 6 and 9 ga. wire (A.W.G. Standard) with white powder-coat finish.
- Spring Loaded Hooks

ORDERING INFORMATION

CATALOG #	DESCRIPTION	STD. PKG.
WGH33	Wireguard for Narrow 4' LED High Bay	1
WGH36	Wireguard for Wide 4' LED High Bay	1

DIMENSIONS

WGH33

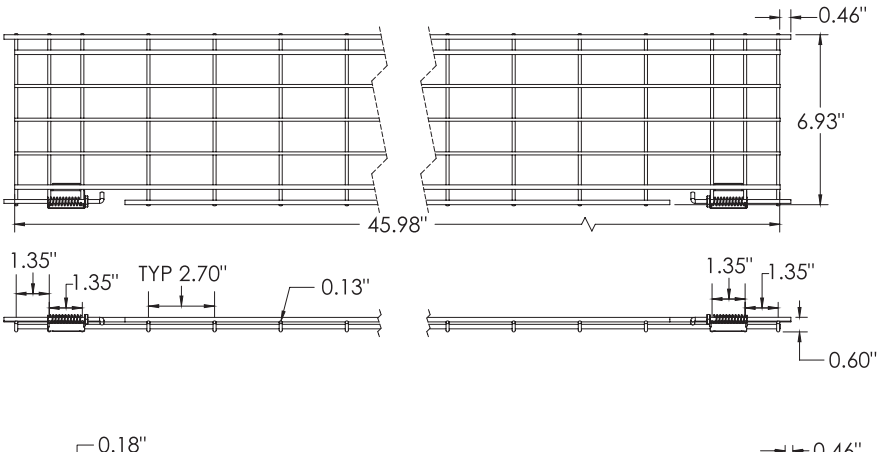

WGH36

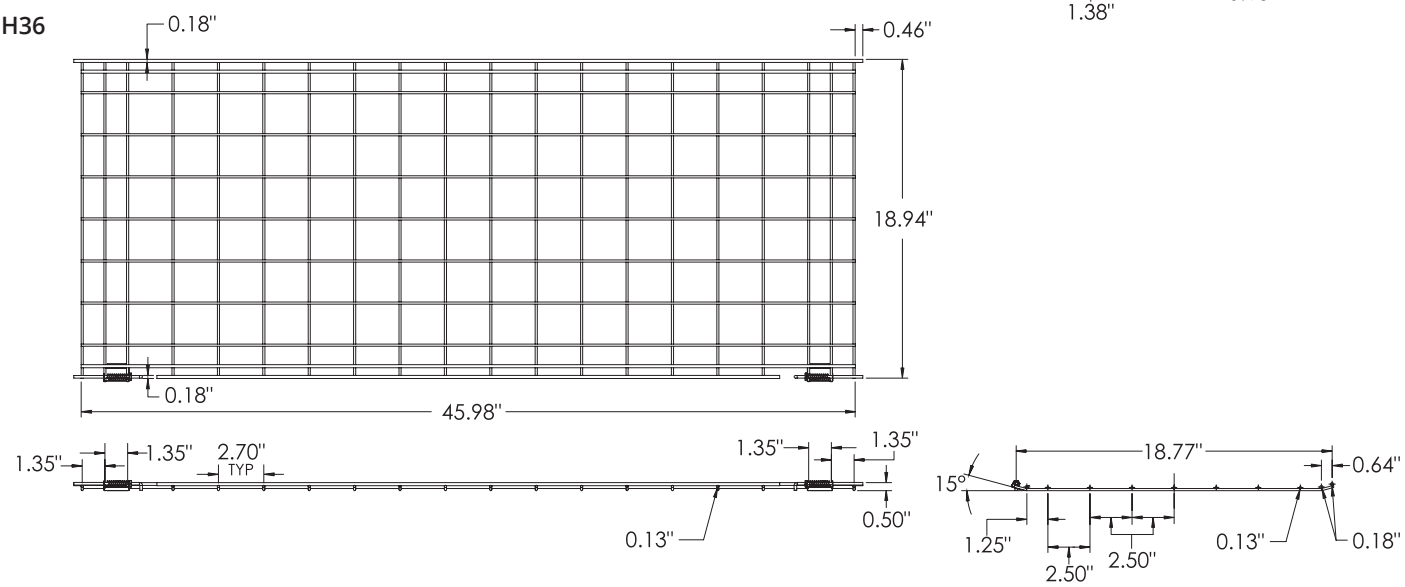

Atlas Lighting Products, Inc.
PO Box 2348 | Burlington, NC 27216
800-849-8485 | fax: 1-855-847-2794 | www.atlasled.com

*The majority of Atlas Lighting Products are assembled in USA facilities by an American Workforce utilizing both Domestic and Foreign components. Meets Buy American requirements within the ARRA.