Independence Series
Medium Wall Light

PROJECT INFORMATION

JOB NAME	
FIXTURE TYPE	Independence Medium Wall Light
CATALOG NUMBER	
APPROVED BY	

SPECIFICATIONS

Construction:
Rugged traditional aluminum die cast housing provides proven environmental protection for LED modules. Traditional fixture designs provide a familiar look and standard installation requirements. Retaining this look allows the ability to upgrade fixtures gradually, while retaining the same overall fixture appearance throughout a facility.

Glare Reduction Lens:
Positioning of the LED modules combined with the unique design of the lens assembly results in light being directed to desired locations and reduces offensive light.

Borosilicate glass lens assembly is designed to provide high efficiency and to target the light where needed to satisfy outdoor lighting requirements.

Thermal Management:
Atlas' Patent Pending exclusive Thermal Management System™ features a unique internal design that allows for lower operating temperatures which results in a brighter, whiter light, more stable color and longer LED and driver life.

Listings:
Luminaire is certified to UL/cUL Standards for Wet Locations

DesignLights Consortium qualied luminaire, eligible for rebates from DLC member utilities. [2]*See chart on other next page for qualifying products.*

AC Input: 120/208/240/277V 347/480V

Driver:
Constant current, Class 2, 120-277 VAC, 50-60 Hz
High Efficiency – min. 88%z
0-10 V Dimming

LEDs:
3000K, 4000K, 4500K, 5000K CCT Fixed |
4000K, 4500K, 5000K CCT Selectable
Epoxy Guard™ protective conformal coated boards
Atlas LEDs provide higher lumen output, greater energy efficiency and more reliable fixture performance.

Testing:
Atlas LED luminaires have been tested by an independent laboratory in accordance with IESNA LM-79 & LM-80.

Warranty: Five-year limited warranty

Installation:
Fixture retains the same knock-out sizes and positions as previous models, reducing wiring costs.

Photo Control: For factory installed 120V button photo control add suffix PC to part number.

Emergency Back-up: For factory installed Emergency Back-Up add suffix EB to part number.

480 Volt: For 480V add suffix 4 to part number.

[1]*LED Life Span Based Upon LM-70 Test Results*

MANUFACTURED & TESTED IN USA

DLC LISTED [2]

c UL us LISTED

5 YEAR WARRANTY

BUY AMERICAN COMPLIANT*

DIMENSIONS

Weight: 9.25 lbs.

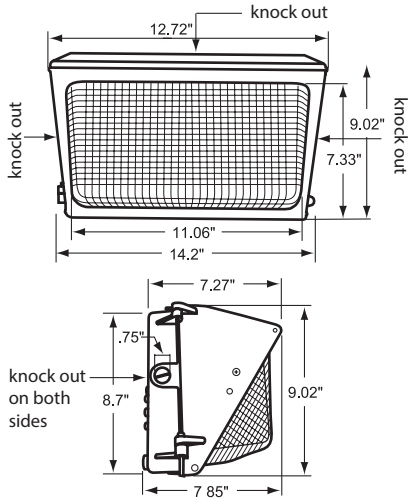

MOUNTING DETAIL

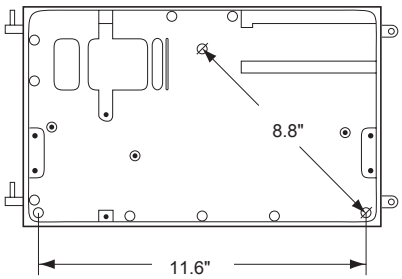

Rebates and Incentives are available in many areas.
Contact an Atlas Representative for more information.

Atlas Lighting Products, Inc.
PO Box 2348 | Burlington, NC 27216
800-849-8485 | www.atlasled.com

*The majority of Atlas Lighting Products are assembled in USA facilities by an American Workforce utilizing both Domestic and Foreign components. Meets Buy American requirements within the ARRA.

Independence Series
Medium Wall Light

ORDERING INFORMATION

WM	S	3-10L					
PRODUCT SERIES	SELECTABLE	LUMEN PACKAGE	COLOR TEMP.	CONTROLS	VOLTAGE	FIXTURE COLOR	OPTIONS
WM = Medium Wall Light	blank = Fixed	5L = 5,000 Lumens 7L = 7,000 Lumens 10L = 10,000 Lumens	3K = 3000K* 4K = 4000K 45K = 4500K 5K = 5000K **5L & 7L only*	Blank = Dimming (0-10V) PC = 120V Photocontrol PM = 120-277V Photocontrol PH = 480V Button Photocontrol	Blank = 120-277 4 = 347/480* **LP or PH only*	Blank = Bronze WT = White* BK = Black* **optional with adder*	EB = Emergency Back-up SP = Surge Protection
	S = Selectable	3-10L = 2,500, 6,000, 8,000, 10,000 Lumens Selectable	blank = Selectable (4000K, 4500K, 5000K)	blank = 120-277V Photocontrol Installed LP = Less Photocontrol PH = 480V Button Photocontrol			

PERFORMANCE DATA

FIXED

UNIT	CRI	3000K CCT		4000K CCT		4500K CCT		5000K CCT		WATTS	BUG RATING	REPLACES UP TO
		DELIVERED LUMENS	EFFICACY (LPW)	DELIVERED LUMENS	EFFICACY (LPW)	DELIVERED LUMENS	EFFICACY (LPW)	DELIVERED LUMENS	EFFICACY (LPW)			
5L	80	4,900	128	5,036	132	4,900	128	5,071	132	38	B1-U4-G3	175W MH
7L	80	7,051	117	7,229	121	7,229	121	7,349	122	60	B1-U5-G4	400W MH
10L	80	n/a	n/a	10,500	135	10,500	135	10,520	135	78	B2-U5-G5	400W MH

SELECTABLE

UNIT	CRI	Selectable 4000K CCT		Selectable 4500K CCT		Selectable 5000K CCT		WATTS	BUG RATING	REPLACES UP TO
		DELIVERED LUMENS	EFFICACY (LPW)	DELIVERED LUMENS	EFFICACY (LPW)	DELIVERED LUMENS	EFFICACY (LPW)			
3L - 10L	80	2,951	137	3,072	142	2,956	137	22	B1-U5-G5	400W MH
	80	6,225	142	6,481	148	6,236	142	44		
	80	8,939	139	9,307	145	8,955	140	64		
	80	10,335	136	10,760	147	10,354	136	76		

DLC PRODUCT INFORMATION

Unit	3000K CCT		4000K CCT		4500K CCT		5000K CCT	
	DLC Product ID	Classification	DLC Product ID	Classification	DLC Product ID	Classification	DLC Product ID	Classification
WM5L	PF6CGY8T	Standard	PVLA4PI8	Standard	POOGUS1I	Standard	P1JVJASQ	Standard
WM7L	P0JMTTEP	Standard	PZWTW9GJ	Standard	P4RG1ZFO	Standard	PKIUKYFX	Standard
WM10L	n/a	n/a	PCZII8GQ	Standard	P8TZU94Q	Standard	PFUF8OXL	Standard

Unit	DLC Product ID	Classification
WMS3-10L	PF5Z4CJ9	Standard

Atlas Lighting Products, Inc.
PO Box 2348 | Burlington, NC 27216
800-849-8485 | www.atlasled.com

The majority of Atlas Lighting Products are assembled in USA facilities by an American Workforce utilizing both Domestic and Foreign components. Meets Buy American requirements within the ARRA.